LIS3MDL 3-Axis Magnetometer Carrier with Voltage Regulator
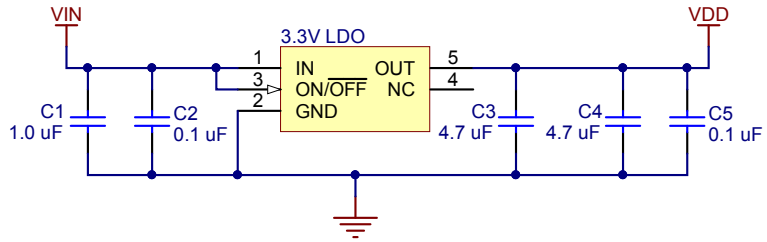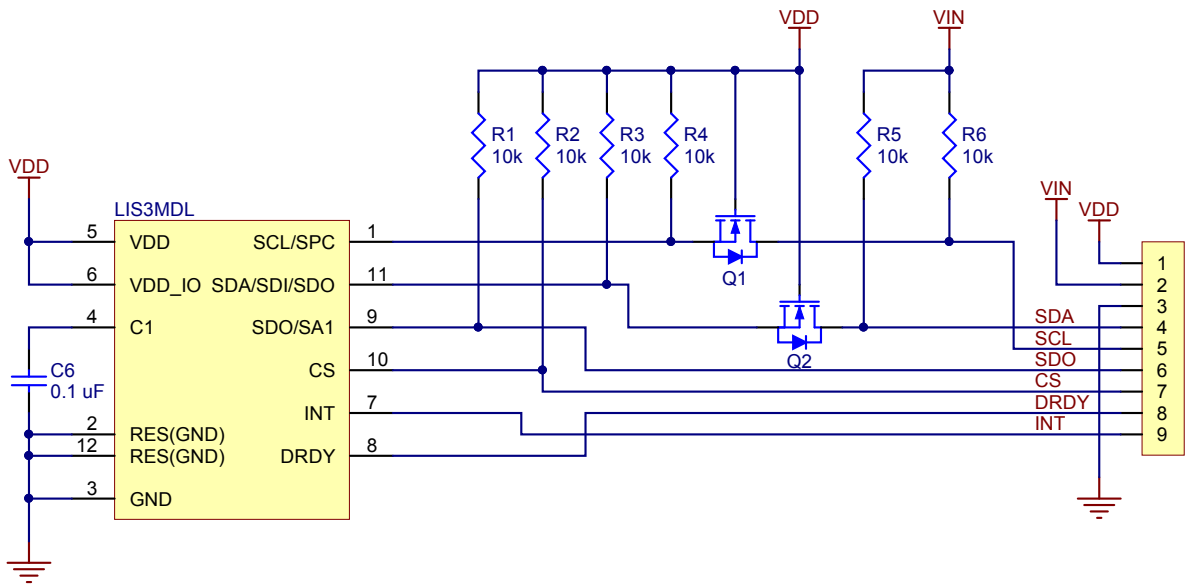
©2016 Pololu Corporation
www.pololu.com